DIDA Move Comfort Stool

TAC580B



DIDA Move Comfort Stool

TAC580B



Taburete polivalente y de aprendizaje activo-colaborativo. Diseñado para su u Versatile and active-collaborative learning stool. Designed for use in classrooms, libraries, or offices.

LEGS

Black

SHELL

Powder Blue, Cayenne, Ash Grey, Olive Green, Nordic, Valencia Yellow, Basalt Grey, Lilac, Mustard, Red Clay, Sand

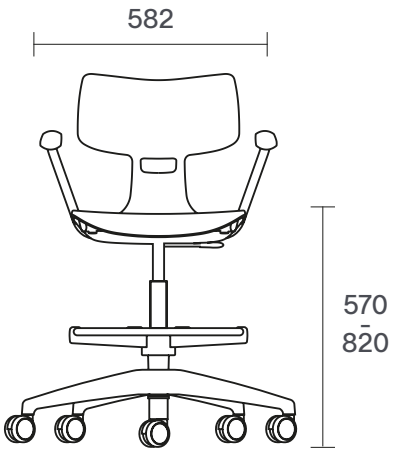

1 ud/box

10 kg

Components

Shell:
- Polypropylene + 15% GF.
- Manufactured using injection molding.

Base:
- 70% polyamide + 30% GF.

Wheels:
- Ø65 mm wheels. Dynamic load capacity of 50 kg per wheel.

Arms:
- Steel tube Ø22x1.5mm. Epoxy paint. Minimum 50µm.
- Armrests: 100% polypropylene.

Main features

- Robust.
- Easy to clean.
- 5-star base or legs with wheels.
- Optional: upholstered seat in sizes 5 and 6.
- Footrest ring: metal or plastic.
- Ergonomic shell.
- Made with 15% recycled polypropylene.
- With bottom cover.
- Height adjustable via lever under the seat.
- Rounded seat edge and lumbar support shape on the lower backrest.
- Slightly flexible backrest.
- Backrest opening for better ventilation.
- Reinforced lower backrest.
- Textured, anti-slip shell.

Maintenance

- Check the condition of the base.
- Check the condition of the shell.
- Ensure there are no cracks or dangerous breaks.

Cleaning

- Remove dust with a dry cloth or brush. Clean with a sponge or cloth using neutral soap or a mixture of water and vinegar. For ingrained dirt, grease, or stains, ammonia can be used.

Lever



Handle



5-star base



Upholstered seat



Optional

Pantone



Ash Grey
4275C



Cayenne
7623C



Olive Green
5625C



Powder Blue
645C



Valencia Yellow
115C



Nordic Blue
289C



Basalt Grey
425C



Mustard
7509C



Lilac
523C



Sand
467C



Red Clay
4038C