Postura+ Lab Stool with backrest

TCA664



Made in Spain

Postura+ Lab Stool with backrest

TCA664



Ergonomic stool with a comfortable seat and five legs for increased stability. Includes a footrest ring for additional support and comfort.

SHELL

Purple Haze, Grape Crush, Nordic Blue, Ink Blue, Aqua Blue, Powder Blue, Forest Green, Olive Green, Hazy Jade, Lime Zest

Sun Yellow, Rose Blossom, Tangerine Fizz, Poppy Red, Misty Brown, Light Sand, Ash Grey, Iron Grey, Slate Grey, Jet Black

STRUCTURE

White, Silver

Quick Shipment serviceavailable

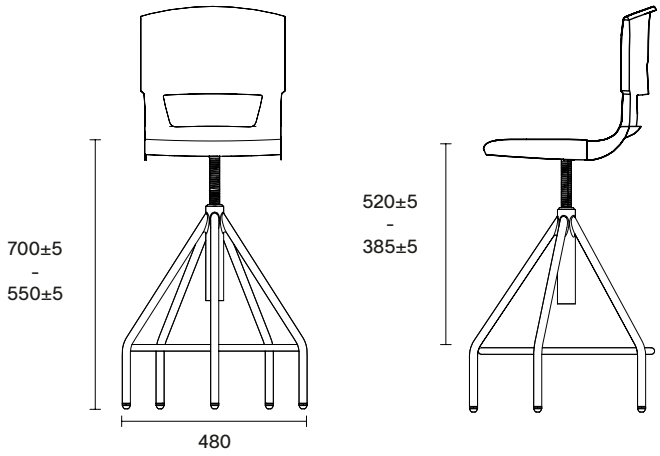

2 ud/box

15 kg

Components

Shell:
- 30% recycled polypropylene + 70% virgin polypropylene.
- Manufactured using gas-assisted high-impact polypropylene injection molding.

Metal structure:
- Legs: Steel tube Ø22x1.5 mm. Epoxy paint.
- Spindle support tube: Steel tube Ø50x1.5 mm. Epoxy paint.

Footrest ring:
- Steel tube Ø16x1.5 mm.

Main features

- Sturdy.
- Lightweight.
- Height-adjustable seat via M25 spindle.
- Plastic end caps on the bottom of the structure.
- Plastic closure cap at the bottom of the spindle support tube.
- Stability provided by its five legs.
- Suitable for prolonged use.
- Comfortable and functional design.

Maintenance

- Check the condition of the shell.
- Ensure there are no cracks or dangerous breaks.
- Inspect the condition of the welds.

Cleaning

- Remove dust with a dry cloth or brush. Clean with a sponge or cloth using neutral soap or a mixture of water and vinegar. For ingrained dirt, grease residue, or stains, ammonia can be used.

- Cleaning of the metal structure: Only use denatured alcohol in extreme cases. Never use solvent.

Shell



Legs



Pantone

Colour	
Purple Haze (518C)	
Grape Crush (513C)	
Nordic Blue (289C)	
Ink Blue (2144C)	
Aqua Blue (638C)	
Powder Blue (645C)	
Forest Green (7728C)	
Green Olive (5625C)	
Hazy Jade (5507C)	
Lime Zest (381C)	
Sun Yellow (7548C)	
Rose Blossom (692C)	
Tangerine Fizz (021C)	
Poppy Red (485C)	
Misty Brown (7531C)	
Light Sand (7536C)	
Ash Grey (4275C)	
Iron Grey (10C)	
Slate Grey (4139C)	
Jet Black (Black C)	